Shaft Surface Shield

軸盾

Sealtech.com

SSS

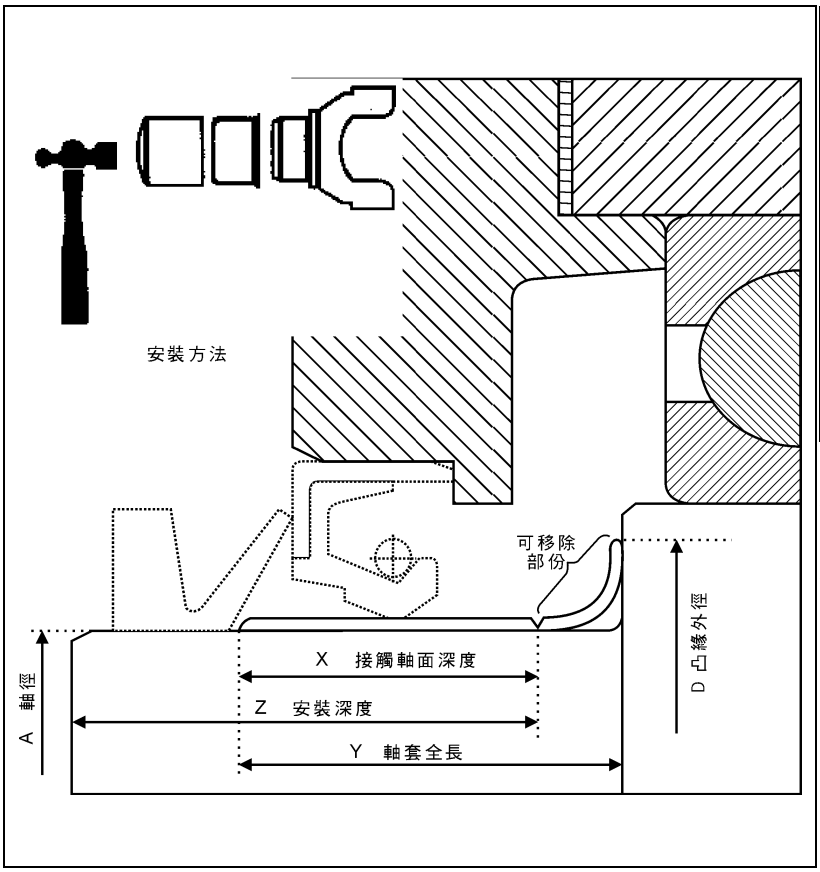

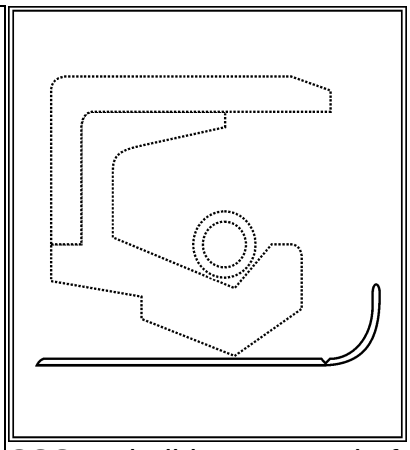

SSS rebuilds worn shaft surface with titanium alloy coating on stainless steel sleeve, better than original.

SSS 不銹鋼套管表面的鈦合金塗層加上特殊打磨工序能把已被磨損的軸表面快速重建勝過原裝，無需更換油封尺寸，使用壽命可能更長。

公制 mm							SSS Number 編號	英吋 Inch						
Nominal Shaft Dia 軸徑	Shaft Dia. Range 適用軸徑範圍 最小(Min)	最大(Max)	接觸軸面寬度 X	軸套全長 Y	凸緣外徑 D	安裝深度 Z		Nominal Shaft Dia 軸徑	Shaft Dia. Range 適用軸徑範圍 最小(Min)	最大(Max)	接觸軸面寬度 X	軸套全長 Y	凸緣外徑 D	安裝深度 Z
12	11.913	12.065	6	8.4	15.5	48	**99049**	*0.472*	*0.469*	*0.475*	*0.236*	*0.331*	*0.61*	*1.875*
12.7	12.649	12.751	6.4	8.7	15.5	51	**99050**	*0.5*	*0.498*	*0.502*	*0.25*	*0.344*	*0.61*	*2*
14	13.894	13.995	6.4	9.9	19.1	47	**99055**	*0.551*	*0.547*	*0.551*	*0.251*	*0.389*	*0.752*	*1.831*
14.3	14.224	14.376	6.4	9.9	19.1	47	**99056**	*0.563*	*0.56*	*0.566*	*0.25*	*0.391*	*0.75*	*1.831*
15	14.961	15.062	5	9	19.1	48	**99059**	*0.591*	*0.589*	*0.593*	*0.197*	*0.354*	*0.75*	*1.862*
15.88	15.824	15.926	8	10.3	19.1	51	**99062**	*0.625*	*0.623*	*0.627*	*0.313*	*0.406*	*0.75*	*2*
16	15.85	16.002	8	11.1	19.1	51	**99058**	*0.63*	*0.624*	*0.63*	*0.315*	*0.437*	*0.752*	*2*
17	16.942	17.043	8	11	27	51	**99068**	*0.669*	*0.667*	*0.671*	*0.313*	*0.433*	*1.063*	*2*
17.37	17.323	17.424	8	11.1	22.9	51	**99060**	*0.684*	*0.682*	*0.686*	*0.313*	*0.438*	*0.9*	*2*
18	17.882	18.009	8	11	27	46	**99082**	*0.706*	*0.704*	*0.709*	*0.315*	*0.433*	*1.063*	*1.811*
19	18.999	19.101	8	11.1	24	51	**99076**	*0.75*	*0.748*	*0.752*	*0.313*	*0.438*	*0.945*	*2*
19.3	19.279	19.329	8	11.1	23.8	51	**99081**	*0.76*	*0.759*	*0.761*	*0.313*	*0.438*	*0.938*	*2*
19.86	19.812	19.914	8	11.1	23.8	51	**99080**	*0.781*	*0.78*	*0.784*	*0.313*	*0.438*	*0.935*	*2*
20	19.939	20.041	8	11	23.6	51	**99078**	*0.787*	*0.785*	*0.789*	*0.313*	*0.433*	*0.93*	*2*
21.82	21.768	21.869	6.5	9.5	29.3	51	**99086**	*0.859*	*0.857*	*0.861*	*0.25*	*0.375*	*1.155*	*2*
22	21.869	21.996	6.6	9.1	30.2	47	**99084**	*0.866*	*0.861*	*0.866*	*0.259*	*0.359*	*1.188*	*1.856*
22	21.869	21.996	8	12	30.2	46	**99085**	*0.866*	*0.861*	*0.866*	*0.315*	*0.472*	*1.188*	*1.812*
22.23	22.174	22.276	8	11.1	27.8	51	**99087**	*0.875*	*0.873*	*0.877*	*0.313*	*0.438*	*1.094*	*2*
23.11	23.063	23.165	8	11.1	30.9	47	**99091**	*0.91*	*0.908*	*0.912*	*0.313*	*0.438*	*1.218*	*1.847*
24	23.876	24.003	8	11.1	28.7	51	**99092**	*0.945*	*0.94*	*0.945*	*0.315*	*0.437*	*1.13*	*2*
24.61	24.536	24.638	8	11.1	28.7	51	**99094**	*0.969*	*0.966*	*0.97*	*0.313*	*0.438*	*1.13*	*2*
24.61	24.536	24.638	15.9	18.3	28.7	51	**99096**	*0.969*	*0.966*	*0.97*	*0.625*	*0.719*	*1.13*	*2*
25	24.943	25.044	8	11	33	51	**99098**	*0.984*	*0.982*	*0.986*	*0.313*	*0.433*	*1.3*	*2*
25.4	25.349	25.451	8	11.1	31	51	**99100**	*1*	*0.998*	*1.002*	*0.313*	*0.438*	*1.219*	*2*
26	25.883	26.01	8	12	33.3	47	**99103**	*1.024*	*1.019*	*1.024*	*0.313*	*0.472*	*1.312*	*1.813*
27	26.924	27.026	8	11	33.5	72	**99106**	*1.063*	*1.06*	*1.064*	*0.313*	*0.438*	*1.32*	*2.813*
27.66	27.61	27.711	8	11.1	35.7	16	**99108**	*1.089*	*1.087*	*1.091*	*0.313*	*0.438*	*1.406*	*0.625*
28	27.94	28.042	9.5	12.7	34.9	47	**99111**	*1.102*	*1.1*	*1.104*	*0.375*	*0.5*	*1.375*	*1.843*
28.58	28.524	28.626	8	11.1	38.1	18	**99112**	*1.125*	*1.123*	*1.127*	*0.313*	*0.438*	*1.5*	*0.688*
29.36	29.312	29.413	9.5	12.7	34.3	18	**99120**	*1.156*	*1.154*	*1.158*	*0.375*	*0.5*	*1.35*	*0.688*

Shaft Surface Shield

軸盾

Sealtech.com

SSS

公制 mm							SSS Number 編號	英吋 Inch						
Nominal Shaft Dia 軸徑	Shaft Dia. Range 適用軸徑範圍 最小(Min)	最大(Max)	接觸軸面寬度 X	軸套全長 Y	凸緣外徑 D	安裝深度 Z		Nominal Shaft Dia 軸徑	Shaft Dia. Range 適用軸徑範圍 最小(Min)	最大(Max)	接觸軸面寬度 X	軸套全長 Y	凸緣外徑 D	安裝深度 Z
29.85	29.794	29.921	8	11.1	40	18	**99122**	*1.175*	*1.173*	*1.178*	*0.313*	*0.438*	*1.575*	*0.688*
30	29.947	30.074	8	11	35.6	18	**99114**	*1.181*	*1.179*	*1.184*	*0.315*	*0.433*	*1.4*	*0.688*
30.15	30.099	30.226	8	11	35.6	18	**99118**	*1.188*	*1.185*	*1.19*	*0.313*	*0.438*	*1.4*	*0.688*
31	30.886	31.039	8	11	39.7	16	**99123**	*1.219*	*1.216*	*1.222*	*0.313*	*0.433*	*1.563*	*0.625*
31.5	31.42	31.572	8	11.1	39.1	18	**99141**	*1.24*	*1.237*	*1.243*	*0.315*	*0.438*	*1.54*	*0.688*
31.75	31.674	31.826	8	11.1	38.1	18	**99125**	*1.25*	*1.247*	*1.253*	*0.313*	*0.438*	*1.5*	*0.688*
32	31.928	32.08	8	11.1	38	18	**99128**	*1.26*	*1.257*	*1.263*	*0.315*	*0.438*	*1.5*	*0.688*
33.3	33.223	33.376	6.4	9.5	40.6	21	**99129**	*1.313*	*1.308*	*1.314*	*0.25*	*0.375*	*1.6*	*0.813*
33.35	33.274	33.426	12.7	15.9	40.5	21	**99131**	*1.313*	*1.31*	*1.316*	*0.5*	*0.625*	*1.594*	*0.813*
34	33.833	34.011	12.7	15.9	41.6	21	**99134**	*1.339*	*1.332*	*1.339*	*0.5*	*0.625*	*1.625*	*0.815*
34.9	34.823	34.976	8	11.1	41.6	21	**99133**	*1.375*	*1.371*	*1.377*	*0.313*	*0.438*	*1.638*	*0.813*
34.9	34.823	34.976	12.7	15.9	41.6	21	**99138**	*1.375*	*1.371*	*1.377*	*0.5*	*0.625*	*1.638*	*0.813*
35	34.925	35.077	13	16	41.6	21	**99139**	*1.375*	*1.375*	*1.381*	*0.512*	*0.63*	*1.638*	*0.813*
36	35.839	35.992	13	17	45.2	25	**99146**	*1.417*	*1.411*	*1.417*	*0.512*	*0.669*	*1.781*	*0.984*
36.53	36.449	36.601	9.5	12.7	45.2	26	**99144**	*1.438*	*1.435*	*1.441*	*0.375*	*0.5*	*1.781*	*1.016*
36.53	36.373	36.525	14.3	17.5	45.2	26	**99143**	*1.438*	*1.432*	*1.438*	*0.563*	*0.688*	*1.781*	*1.016*
38	37.846	37.998	13	17	45.2	25	**99147**	*1.496*	*1.49*	*1.496*	*0.512*	*0.669*	*1.781*	*0.984*
38.1	38.024	38.176	9.5	12.7	45.2	26	**99150**	*1.5*	*1.497*	*1.503*	*0.375*	*0.5*	*1.781*	*1.016*
38.1	38.024	38.176	14.3	17.5	45.2	26	**99149**	*1.5*	*1.497*	*1.503*	*0.563*	*0.688*	*1.781*	*1.016*
39.42	39.345	39.497	11.1	14.3	47.2	26	**99155**	*1.552*	*1.549*	*1.555*	*0.438*	*0.563*	*1.859*	*1.016*
38.68	38.608	38.76	11.1	14.3	47.2	26	**99152**	*1.523*	*1.52*	*1.526*	*0.438*	*0.563*	*1.859*	*1.016*
39.67	39.599	39.751	14.3	17.5	47.2	26	**99156**	*1.563*	*1.559*	*1.565*	*0.563*	*0.688*	*1.859*	*1.016*
39.85	39.776	39.929	15.9	19.1	47.2	26	**99159**	*1.569*	*1.566*	*1.572*	*0.625*	*0.75*	*1.859*	*1.016*
40	39.929	40.081	13	16	47	26	**99157**	*1.578*	*1.572*	*1.578*	*0.512*	*0.63*	*1.85*	*1.023*
40.77	40.691	40.843	12.7	16.3	49.2	26	**99160**	*1.605*	*1.602*	*1.608*	*0.5*	*0.641*	*1.938*	*1*
41	40.843	40.996	12.7	15.9	49.2	26	**99163**	*1.614*	*1.608*	*1.614*	*0.5*	*0.625*	*1.937*	*1.016*
41.28	41.199	41.351	8	11.1	47.6	26	**99161**	*1.625*	*1.622*	*1.628*	*0.313*	*0.438*	*1.875*	*1.016*
41.28	41.199	41.351	14.3	17.5	47.6	21	**99162**	*1.625*	*1.622*	*1.628*	*0.563*	*0.688*	*1.875*	*0.813*
42	41.834	41.986	11.3	14.5	53	22	**99166**	*1.65*	*1.647*	*1.653*	*0.445*	*0.571*	*2.087*	*0.846*
42	41.834	41.986	14.3	17.5	53	22	**99169**	*1.65*	*1.647*	*1.653*	*0.563*	*0.689*	*2.087*	*0.827*
42	41.986	42.139	14	17.5	53	22	**99165**	*1.656*	*1.653*	*1.659*	*0.55*	*0.689*	*2.087*	*0.827*
42.88	42.799	42.951	8	11.1	48.4	22	**99167**	*1.688*	*1.685*	*1.691*	*0.313*	*0.438*	*1.906*	*0.875*
42.88	42.774	42.926	14.3	17.5	48.4	22	**99168**	*1.688*	*1.684*	*1.69*	*0.563*	*0.688*	*1.906*	*0.875*
43	42.85	43.002	12.7	15.9	48.4	22	**99182**	*1.693*	*1.687*	*1.693*	*0.5*	*0.625*	*1.906*	*0.843*
43.66	43.561	43.713	14.3	17.5	51.6	21	**99171**	*1.719*	*1.715*	*1.721*	*0.563*	*0.688*	*2.031*	*0.813*
44.17	44.094	44.247	9.5	12.7	52.4	21	**99170**	*1.739*	*1.736*	*1.742*	*0.375*	*0.5*	*2.063*	*0.813*
44.45	44.374	44.526	9.5	12.7	52.2	21	**99172**	*1.75*	*1.747*	*1.753*	*0.375*	*0.5*	*2.055*	*0.813*
44.45	44.374	44.526	13.5	15.9	52.4	22	**99180**	*1.75*	*1.747*	*1.753*	*0.531*	*0.625*	*2.063*	*0.878*
44.45	44.374	44.526	14.3	17.5	52.4	21	**99174**	*1.75*	*1.747*	*1.753*	*0.563*	*0.688*	*2.063*	*0.813*
44.45	44.374	44.526	19.1	22.2	52.4	21	**99175**	*1.75*	*1.747*	*1.753*	*0.75*	*0.875*	*2.063*	*0.813*
44.8	44.729	44.882	14.3	17.5	52.4	21	**99176**	*1.766*	*1.761*	*1.767*	*0.563*	*0.688*	*2.063*	*0.813*
45	44.933	45.085	14	17	53	21	**99177**	*1.772*	*1.769*	*1.775*	*0.551*	*0.669*	*2.087*	*0.813*
45.24	45.161	45.314	17.2	20.3	54	27	**99179**	*1.781*	*1.778*	*1.784*	*0.675*	*0.8*	*2.125*	*1.062*
46	45.949	46.101	14.3	17.5	53.1	26	**99181**	*1.813*	*1.809*	*1.815*	*0.563*	*0.688*	*2.09*	*1*
47.22	47.168	47.32	14.3	17.5	54.8	25	**99185**	*1.859*	*1.857*	*1.863*	*0.563*	*0.688*	*2.156*	*1*
47.45	47.396	47.549	22.6	26	55.6	25	**99186**	*1.868*	*1.866*	*1.872*	*0.889*	*1.025*	*2.188*	*1*
47.63	47.549	47.701	4.4	7.5	56	19	**99190**	*1.875*	*1.872*	*1.878*	*0.175*	*0.295*	*2.203*	*0.744*
47.63	47.549	47.701	7.5	10.5	56	19	**99188**	*1.875*	*1.872*	*1.878*	*0.295*	*0.415*	*2.203*	*0.744*
47.63	47.549	47.701	9.5	13.1	56	27	**99184**	*1.875*	*1.872*	*1.878*	*0.375*	*0.516*	*2.203*	*1.05*
47.63	47.549	47.701	14.3	17.5	56	25	**99187**	*1.875*	*1.872*	*1.878*	*0.563*	*0.688*	*2.203*	*1*
48	47.93	48.082	14	17	56	25	**99189**	*1.891*	*1.887*	*1.893*	*0.551*	*0.668*	*2.205*	*0.984*
48.56	48.489	48.641	9.5	12.7	56.4	26	**99192**	*1.912*	*1.909*	*1.915*	*0.375*	*0.5*	*2.219*	*1*
49.2	49.124	49.276	14.3	17.5	56.4	26	**99193**	*1.938*	*1.934*	*1.94*	*0.563*	*0.688*	*2.219*	*1*
50	49.911	50.063	14	17	57	25	**99196**	*1.969*	*1.965*	*1.971*	*0.551*	*0.668*	*2.244*	*0.984*
50.3	50.216	50.368	14.3	17.9	58.7	27	**99198**	*1.98*	*1.977*	*1.983*	*0.563*	*0.704*	*2.313*	*1.05*
50.8	50.724	50.876	14.3	17.5	61.1	25	**99199**	*2*	*1.977*	*2.003*	*0.563*	*0.688*	*2.406*	*1*
50.8	50.724	50.876	22.2	25.4	61.1	25	**99200**	*2*	*1.977*	*2.003*	*0.875*	*1*	*2.406*	*1*
52	51.816	51.994	12.7	15.9	62.7	35	**99204**	*2.047*	*2.04*	*2.047*	*0.5*	*0.625*	*2.469*	*1.358*
52.32	52.248	52.4	20.7	23.8	63.4	35	**99205**	*2.063*	*2.057*	*2.063*	*0.813*	*0.938*	*2.469*	*1.375*
54	53.924	54.051	12.7	19.1	61.5	33	**99210**	*2.215*	*2.123*	*2.128*	*0.5*	*0.75*	*2.422*	*1.281*

Shaft Surface Shield

軸盾

Sealtech.com

SSS

公制 mm							SSS Number 編號	英吋 Inch						
Nominal Shaft Dia 軸徑	Shaft Dia. Range 適用軸徑範圍 最小(Min)	最大(Max)	接觸軸面寬度 X	軸套全長 Y	凸緣外徑 D	安裝深度 Z		Nominal Shaft Dia 軸徑	Shaft Dia. Range 適用軸徑範圍 最小(Min)	最大(Max)	接觸軸面寬度 X	軸套全長 Y	凸緣外徑 D	安裝深度 Z
54	53.95	54.102	19.8	23.8	61.5	35	**99212**	2.215	2.124	2.13	0.781	0.938	2.422	1.375
55	54.915	55.067	20	23	62	32	**99215**	2.165	2.162	2.168	0.787	0.905	2.441	1.25
55.6	55.524	55.677	19.8	23.8	63.5	34	**99218**	2.188	2.186	2.192	0.781	0.938	2.5	1.313
56	55.829	56.007	12.7	15.9	64.3	34	**99220**	2.205	2.198	2.205	0.5	0.625	2.531	1.315
56.64	56.566	56.718	12.7	15.9	64.3	34	**99229**	2.23	2.227	2.233	0.5	0.625	2.531	1.313
56.64	56.566	56.718	19.8	23	64.3	32	**99230**	2.23	2.227	2.233	0.781	0.906	2.531	1.25
56.9	56.82	56.972	19.4	22.9	65.1	32	**99226**	2.24	2.237	2.243	0.764	0.9	2.563	1.25
57.2	57.125	57.277	8	11.1	64.3	33	**99227**	2.25	2.249	2.255	0.313	0.438	2.531	1.313
57.2	57.125	57.277	19.8	23.8	64.3	33	**99225**	2.25	2.249	2.255	0.781	0.938	2.531	1.313
58.72	58.649	58.801	19	22.2	69.8	39	**99231**	2.313	2.327	2.333	0.781	0.875	2.75	1.5
59.13	59.106	59.258	19.1	22.2	69.9	38	**99233**	2.328	2.327	2.333	0.75	0.875	2.75	1.5
60	59.919	60.071	9.4	11.4	70.7	37	**99241**	2.362	2.359	2.365	0.37	0.45	2.785	1.471
60	59.919	60.071	19.8	23.8	69.9	35	**99235**	2.362	2.369	2.375	0.787	0.938	2.75	1.375
60.33	60.3	60.452	13.4	17.3	69.9	35	**99240**	2.375	2.374	2.38	0.526	0.683	2.75	1.375
60.33	60.249	60.401	15.1	19.1	69.9	35	**99238**	2.375	2.372	2.378	0.594	0.75	2.75	1.375
60.33	60.173	60.325	19.8	23.8	69.9	35	**99236**	2.375	2.369	2.375	0.781	0.938	2.75	1.375
60.33	60.3	60.452	19.8	23.8	69.9	35	**99237**	2.375	2.374	2.38	0.781	0.938	2.75	1.375
62	61.849	62.001	12.7	15.9	71.8	37	**99242**	2.438	2.435	2.441	0.5	0.625	2.828	1.425
61.9	61.824	61.976	19.8	23.8	71.8	35	**99243**	2.438	2.434	2.44	0.781	0.938	2.828	1.393
62	61.824	62.001	12.7	15.9	71.8	36	**99244**	2.441	2.434	2.441	0.5	0.625	2.828	1.425
74.7	63.221	63.373	19.8	23.8	73	35	**99249**	2.942	2.489	2.495	0.781	0.938	2.875	1.393
63.5	63.5	63.652	12.7	16.7	71.8	35	**99248**	2.5	2.5	2.506	0.5	0.656	2.828	1.393
63.5	63.424	63.576	14.1	16.5	71.6	23	**99253**	2.5	2.497	2.503	0.555	0.65	2.82	0.89
63.5	63.5	63.652	19.8	23.8	71.6	35	**99250**	2.5	2.5	2.506	0.781	0.938	2.82	1.375
63.83	63.754	63.906	19.8	23	71.8	37	**99251**	2.516	2.51	2.516	0.781	0.906	2.828	1.438
65	64.922	65.075	20	23	72.4	35	**99254**	2.559	2.556	2.562	0.787	0.905	2.85	1.375
65.1	65.024	65.176	19.8	23.8	73.4	35	**99256**	2.563	2.56	2.566	0.781	0.938	2.891	1.375
66	65.913	66.065	19.8	23.8	76	32	**99259**	2.598	2.595	2.601	0.781	0.938	2.99	1.25
66.57	66.497	66.65	19.8	23.8	77.4	35	**99261**	2.621	2.618	2.624	0.781	0.938	3.047	1.375
66.68	66.599	66.751	12.7	15.9	77.4	35	**99260**	2.625	2.622	2.628	0.5	0.625	3.047	1.375
66.68	66.573	66.726	19.8	23	77.4	35	**99264**	2.625	2.621	2.627	0.781	0.906	3.047	1.375
66.75	66.675	66.827	19.8	23.8	77.4	35	**99262**	2.625	2.625	2.631	0.781	0.928	3.047	1.375
68	67.818	67.996	19.1	22.2	79.4	43	**99266**	2.677	2.67	2.677	0.752	0.874	3.126	1.689
69.34	69.266	69.418	19.8	23	79.4	34	**99268**	2.73	2.727	2.733	0.781	0.906	3.125	1.313
69.67	69.596	69.748	19.8	23.8	77.9	32	**99273**	2.743	2.74	2.74	0.781	0.938	3.065	1.25
70	69.85	70.002	10.3	14.3	79.4	32	**99272**	2.75	2.75	2.756	0.406	0.563	3.125	1.25
69.9	69.723	69.875	19.8	23.8	79.4	32	**99274**	2.75	2.745	2.751	0.781	0.938	3.125	1.25
69.85	69.774	69.926	19.8	41.3	78.1	41	**99270**	2.75	2.747	2.753	0.781	1.625	3.075	1.625
70	69.85	70.002	19.8	23.8	79.4	32	**99275**	2.75	2.75	2.756	0.781	0.938	3.125	1.25
70	69.85	70.002	28.6	31.8	79.4	33	**99269**	2.75	2.75	2.756	1.125	1.25	3.125	1.312
69.85	69.774	69.926	36.5	41.3	78.1	41	**99267**	2.75	2.747	2.753	1.438	1.625	3.075	1.625
70	69.926	70.079	20	24	79.4	32	**99276**	2.756	2.753	2.759	0.787	0.945	3.125	1.25
71.42	71.349	71.501	15.1	17.5	80.9	32	**99281**	2.813	2.809	2.815	0.594	0.688	3.188	1.25
72	71.806	72.009	19.1	22.2	81.9	35	**99284**	2.835	2.827	2.835	0.752	0.874	3.224	1.343
72.16	72.085	72.238	12.7	16.7	81.9	32	**99282**	2.844	2.838	2.844	0.5	0.656	3.225	1.25
72.87	72.796	72.949	19.8	23.8	81	32	**99286**	2.869	2.866	2.872	0.781	0.938	3.188	1.25
73	72.974	73.127	19.8	23.8	81.8	32	**99287**	2.875	2.873	2.879	0.781	0.938	3.219	1.25
74.68	74.6	74.752	12.7	16.3	84.9	34	**99290**	2.938	2.937	2.943	0.5	0.641	3.344	1.331
74.68	74.6	74.752	19.8	23.8	84.9	34	**99293**	2.938	2.937	2.943	0.781	0.938	3.344	1.313
75	74.93	75.082	15.1	17.5	83.1	28	**99289**	2.953	2.95	2.956	0.594	0.688	3.273	1.083
75	74.93	75.082	22	26	84	34	**99294**	2.953	2.95	2.956	0.866	1.024	3.305	1.313
75.54	75.489	75.59	20.6	25.4	82.2	32	**99292**	2.974	2.972	2.976	0.813	1	3.235	1.25
76	75.946	76.098	12.3	15.9	85.3	34	**99291**	2.993	2.99	2.996	0.484	0.625	3.359	1.331
76	75.946	76.098	14.3	17.5	85.3	35	**99298**	2.993	2.99	2.996	0.563	0.688	3.359	1.375
76	75.946	76.098	20.7	25.4	85.1	33	**99299**	2.993	2.99	2.996	0.813	1	3.35	1.281
76.2	76.2	76.352	15.9	20.7	85	33	**99303**	3	3	3.006	0.625	0.813	3.345	1.28
76.2	76.124	76.276	20.7	23.8	82.3	35	**99296**	3	2.997	3.003	0.813	0.938	3.24	1.375
76.2	76.2	76.352	20.7	25.4	82.2	33	**99300**	3	3	3.006	0.813	1	3.235	1.281
76.48	76.403	76.556	12.7	15.8	85.2	51	**99301**	3.011	3.008	3.014	0.5	0.625	3.355	2
78	77.8	78.003	19.5	22.2	88.1	53	**99306**	3.071	3.063	3.071	0.77	0.874	3.469	2.059

Shaft Surface Shield

軸盾

Sealtech.com

SSS

公制 mm							SSS Number 編號	英吋 Inch						
Nominal Shaft Dia 軸徑	Shaft Dia. Range 適用軸徑範圍 最小(Min)	最大(Max)	接觸軸面寬度 X	軸套全長 Y	凸緣外徑 D	安裝深度 Z		Nominal Shaft Dia 軸徑	Shaft Dia. Range 適用軸徑範圍 最小(Min)	最大(Max)	接觸軸面寬度 X	軸套全長 Y	凸緣外徑 D	安裝深度 Z
79.38	79.35	79.553	14	18	89.5	52	**99307**	*3.125*	*3.124*	*3.132*	*0.551*	*0.709*	*3.525*	*2.031*
79.38	79.248	79.4	17.5	20.7	89.7	51	**99311**	*3.125*	*3.12*	*3.126*	*0.688*	*0.813*	*3.531*	*2*
79.38	79.248	79.4	20.7	25.4	89.7	51	**99312**	*3.125*	*3.12*	*3.126*	*0.813*	*1*	*3.531*	*2*
80	79.807	80.01	19.1	22.5	89.9	35	**99313**	*3.15*	*3.142*	*3.15*	*0.75*	*0.886*	*3.54*	*1.375*
80	79.908	80.086	11	15	90	35	**99317**	*3.15*	*3.146*	*3.153*	*0.433*	*0.591*	*3.543*	*1.375*
80	79.908	80.086	21	24	90	35	**99315**	*3.15*	*3.146*	*3.153*	*0.827*	*0.945*	*3.543*	*1.375*
82	81.915	82.076	16.8	21.6	91.1	45	**99328**	*3.228*	*3.225*	*3.231*	*0.66*	*0.848*	*3.585*	*1.75*
82.55	82.55	82.702	15.1	18.3	90.8	35	**99324**	*3.25*	*3.25*	*3.256*	*0.595*	*0.719*	*3.575*	*1.375*
82.55	82.55	82.702	17.5	22.2	91.1	32	**99326**	*3.25*	*3.25*	*3.256*	*0.688*	*0.875*	*3.585*	*1.25*
82.55	82.474	82.626	20.7	25.4	91.3	35	**99322**	*3.25*	*3.247*	*3.253*	*0.813*	*1*	*3.594*	*1.375*
85	84.76	85.014	17	21	94	35	**99332**	*3.342*	*3.337*	*3.347*	*0.669*	*0.827*	*3.7*	*1.378*
82.55	82.55	82.702	20.7	25.4	91.1	35	**99325**	*3.25*	*3.25*	*3.256*	*0.813*	*1*	*3.585*	*1.375*
84	83.998	84.15	20.7	25.4	93.7	35	**99331**	*3.31*	*3.307*	*3.313*	*0.813*	*1*	*3.688*	*1.375*
85	84.76	84.988	21	25	94	36	**99333**	*3.342*	*3.337*	*3.347*	*0.827*	*0.984*	*3.7*	*1.378*
85	84.785	84.988	10.1	12.7	93.9	37	**99334**	*3.346*	*3.338*	*3.346*	*0.398*	*0.5*	*3.697*	*1.433*
85.73	85.674	85.827	9.5	12.7	93.7	36	**99338**	*3.375*	*3.373*	*3.379*	*0.375*	*0.5*	*3.688*	*1.41*
85.73	85.674	85.827	20.7	25.4	93.9	35	**99337**	*3.375*	*3.373*	*3.379*	*0.813*	*1*	*3.695*	*1.375*
87.33	87.249	87.401	19.8	23	97.6	36	**99339**	*3.438*	*3.435*	*3.441*	*0.781*	*0.906*	*3.844*	*1.406*
88.39	88.316	88.468	19.8	23	97.4	36	**99340**	*3.48*	*3.477*	*3.483*	*0.781*	*0.906*	*3.835*	*1.406*
89	88.9	89.052	8	12.7	97.2	34	**99347**	*3.5*	*3.5*	*3.506*	*0.313*	*0.5*	*3.825*	*1.347*
88.9	88.824	88.976	15.9	20.7	97.6	34	**99346**	*3.5*	*3.497*	*3.503*	*0.625*	*0.813*	*3.844*	*1.347*
89	88.9	89.052	20.7	25.4	97.6	34	**99350**	*3.5*	*3.5*	*3.506*	*0.813*	*1*	*3.844*	*1.347*
89	88.925	89.078	15.9	20.7	97.6	34	**99349**	*3.504*	*3.501*	*3.507*	*0.625*	*0.813*	*3.844*	*1.348*
90	89.916	90.068	11.1	13.7	101.6	46	**99352**	*3.543*	*3.54*	*3.546*	*0.438*	*0.538*	*4*	*1.813*
90	89.916	90.068	13.4	16.9	101.6	44	**99353**	*3.543*	*3.54*	*3.546*	*0.526*	*0.667*	*4*	*1.75*
90	89.916	90.068	18	23	101.6	46	**99351**	*3.543*	*3.54*	*3.546*	*0.71*	*0.906*	*4*	*1.813*
90	89.916	90.068	23	28	101.6	44	**99354**	*3.543*	*3.54*	*3.546*	*0.906*	*1.102*	*4*	*1.75*
90.5	90.424	90.576	20.6	25.4	99.1	45	**99356**	*3.563*	*3.56*	*3.566*	*0.813*	*1*	*3.9*	*1.75*
92	91.897	92.05	20.6	25.4	102.4	45	**99360**	*3.621*	*3.618*	*3.624*	*0.813*	*1*	*4.031*	*1.75*
92.1	92.024	92.177	12.7	15.9	102.2	44	**99363**	*3.625*	*3.623*	*3.629*	*0.5*	*0.625*	*4.025*	*1.75*
92.1	92.024	92.177	20.7	25.4	102.4	44	**99362**	*3.625*	*3.623*	*3.629*	*0.813*	*1*	*4.031*	*1.75*
93.68	93.574	93.726	8	11.1	102.4	22	**99368**	*3.688*	*3.684*	*3.69*	*0.313*	*0.438*	*4.031*	*0.875*
93.68	93.599	93.751	20.6	23.8	102.2	45	**99365**	*3.688*	*3.685*	*3.691*	*0.813*	*0.938*	*4.025*	*1.75*
94.74	94.666	94.818	12	15.1	102	44	**99359**	*3.73*	*3.727*	*3.733*	*0.469*	*0.594*	*4.016*	*1.719*
94.74	94.666	94.818	19.8	23	102.2	45	**99366**	*3.73*	*3.727*	*3.733*	*0.781*	*0.906*	*4.025*	*1.75*
95	94.92	95.072	21	24	102.2	46	**99369**	*3.74*	*3.737*	*3.743*	*0.827*	*0.945*	*4.025*	*1.8*
95	94.996	95.148	8.7	12.7	102.4	45	**99374**	*3.743*	*3.74*	*3.746*	*0.344*	*0.5*	*4.031*	*1.75*
95	94.996	95.148	11.9	15.1	102.5	46	**99364**	*3.743*	*3.74*	*3.746*	*0.469*	*0.594*	*4.035*	*1.8*
95.33	95.25	95.402	8.7	12.7	102.2	46	**99367**	*3.753*	*3.75*	*3.756*	*0.344*	*0.5*	*4.025*	*1.8*
95.22	95.148	95.301	14.3	17.5	102.2	46	**99376**	*3.749*	*3.746*	*3.752*	*0.563*	*0.688*	*4.025*	*1.8*
95.33	95.25	95.402	17.5	22.2	102.1	46	**99372**	*3.753*	*3.75*	*3.756*	*0.688*	*0.875*	*4.02*	*1.8*
98.32	98.247	98.4	20.6	25.4	106.3	48	**99386**	*3.871*	*3.868*	*3.874*	*0.813*	*1*	*4.185*	*1.875*
98.45	98.374	98.527	20.6	25.4	107.2	48	**99387**	*3.875*	*3.873*	*3.879*	*0.813*	*1*	*4.219*	*1.875*
100	99.949	100.101	20.6	25.4	110	53	**99393**	*3.938*	*3.935*	*3.941*	*0.813*	*1*	*4.313*	*2.05*
101.6	101.549	101.752	12.7	15.9	111.1	52	**99401**	*4*	*3.998*	*4.006*	*0.5*	*0.625*	*4.375*	*2.066*
101.6	101.549	101.752	15.2	18.4	111.1	52	**99395**	*4*	*3.998*	*4.006*	*0.6*	*0.725*	*4.375*	*2.05*
101.6	101.549	101.752	16.5	19.7	111.1	35	**99400**	*4*	*3.998*	*4.006*	*0.65*	*0.775*	*4.375*	*1.375*
101.6	101.549	101.752	20.7	25.4	111.1	52	**99399**	*4*	*3.998*	*4.006*	*0.813*	*1*	*4.375*	*2.05*
104	103.886	104.089	20	24	112.7	36	**99409**	*4.094*	*4.09*	*4.098*	*0.787*	*0.945*	*4.438*	*1.417*
104.8	104.699	104.902	20.7	25.4	113.5	35	**99412**	*4.125*	*4.122*	*4.13*	*0.813*	*1*	*4.47*	*1.375*
105	104.902	105.105	20	23.2	113.5	36	**99413**	*4.134*	*4.13*	*4.138*	*0.787*	*0.913*	*4.47*	*1.378*
106.35	106.248	106.451	20.6	25.4	114.3	35	**99418**	*4.188*	*4.183*	*4.191*	*0.813*	*1*	*4.5*	*1.375*
107.44	107.34	107.544	19.8	23	117.1	37	**99423**	*4.234*	*4.226*	*4.234*	*0.781*	*0.906*	*4.61*	*1.438*
108	107.899	108.102	20.6	25.4	117.1	37	**99424**	*4.25*	*4.248*	*4.256*	*0.813*	*1*	*4.61*	*1.43*
110	109.906	110.109	12.9	16.5	125	32	**99435**	*4.328*	*4.327*	*4.335*	*0.509*	*0.65*	*4.921*	*1.25*
110	109.779	110.007	11.4	15	125	33	**99434**	*4.331*	*4.322*	*4.331*	*0.448*	*0.589*	*4.921*	*1.297*
111	110.998	111.201	20.6	25.4	120.7	42	**99437**	*4.375*	*4.37*	*4.378*	*0.813*	*1*	*4.75*	*1.65*
112	111.785	111.989	19	22.5	120.7	28	**99438**	*4.406*	*4.401*	*4.409*	*0.748*	*0.886*	*4.75*	*1.063*
112.72	112.624	112.827	25.4	29	122.2	34	**99439**	*4.438*	*4.434*	*4.442*	*1*	*1.142*	*4.813*	*1.313*
114.3	114.198	114.402	20.6	25.4	124.5	32	**99450**	*4.5*	*4.496*	*4.504*	*0.813*	*1*	*4.9*	*1.25*

Shaft Surface Shield

軸盾

Sealtech.com

SSS

公制 mm							SSS Number 編號	英吋 Inch						
Nominal Shaft Dia 軸徑	Shaft Dia. Range 適用軸徑範圍 最小(Min)	最大(Max)	接觸軸面寬度 X	軸套全長 Y	凸緣外徑 D	安裝深度 Z		Nominal Shaft Dia 軸徑	Shaft Dia. Range 適用軸徑範圍 最小(Min)	最大(Max)	接觸軸面寬度 X	軸套全長 Y	凸緣外徑 D	安裝深度 Z
115	114.884	115.087	20.6	23.8	127	32	**99452**	*4.527*	*4.523*	*4.531*	*0.813*	*0.938*	*5*	*1.25*
117.48	117.373	117.577	11.1	15.9	127	35	**99465**	*4.625*	*4.621*	*4.629*	*0.438*	*0.625*	*5*	*1.375*
117.48	117.373	117.577	25.4	31.8	128.6	35	**99463**	*4.625*	*4.621*	*4.629*	*1*	*1.25*	*5.063*	*1.375*
119	118.999	119.202	20.6	25.4	128.6	35	**99468**	*4.688*	*4.685*	*4.693*	*0.813*	*1*	*5.063*	*1.375*
120	119.888	120.091	8	11	129.8	34	**99471**	*4.724*	*4.72*	*4.728*	*0.315*	*0.433*	*5.11*	*1.323*
120	119.888	120.091	20	25	129.8	33	**99473**	*4.724*	*4.72*	*4.728*	*0.787*	*0.984*	*5.11*	*1.26*
120.65	120.548	120.752	12.7	19	127	39	**99475**	*4.75*	*4.746*	*4.754*	*0.5*	*0.75*	*5*	*1.5*
122	121.895	122.098	20	24	131.5	33	**99472**	*4.803*	*4.799*	*4.807*	*0.787*	*0.945*	*5.177*	*1.26*
123	122.911	123.114	20	25	132.8	32	**99484**	*4.843*	*4.839*	*4.847*	*0.787*	*0.984*	*5.229*	*1.244*
123.83	123.723	123.927	15.9	19.1	133.4	37	**99487**	*4.875*	*4.871*	*4.879*	*0.625*	*0.75*	*5.25*	*1.438*
125	124.892	125.095	10	14	137.2	37	**99490**	*4.921*	*4.917*	*4.925*	*0.394*	*0.551*	*5.4*	*1.438*
125	124.892	125.095	26	32	137.2	37	**99492**	*4.921*	*4.917*	*4.925*	*1.024*	*1.26*	*5.4*	*1.438*
127	126.949	127.152	13.7	17.3	137.2	37	**99501**	*5*	*4.998*	*5.006*	*0.54*	*0.681*	*5.4*	*1.438*
127	126.949	127.152	17.5	22.2	137.2	37	**99498**	*5*	*4.998*	*5.006*	*0.688*	*0.875*	*5.4*	*1.438*
127	126.949	127.152	20.7	25.4	136.9	37	**99499**	*5*	*4.998*	*5.006*	*0.813*	*1*	*5.39*	*1.438*
130	129.794	129.997	19.1	23.8	139.5	30	**99494**	*5.114*	*5.11*	*5.118*	*0.75*	*0.938*	*5.493*	*1.181*
130.18	130.048	130.251	20.7	25.4	139.7	32	**99513**	*5.125*	*5.12*	*5.128*	*0.813*	*1*	*5.5*	*1.25*
130	129.972	130.175	22	25.3	139.5	33	**99491**	*5.125*	*5.117*	*5.125*	*0.866*	*0.996*	*5.493*	*1.28*
133.35	133.248	133.452	20.6	25.4	141.2	32	**99525**	*5.25*	*5.246*	*5.254*	*0.813*	*1*	*5.56*	*1.25*
135	134.798	135.001	20.5	25.4	149.2	32	**99533**	*5.313*	*5.307*	*5.315*	*0.807*	*1*	*5.875*	*1.25*
136.53	136.423	136.627	20.6	25.4	149.2	32	**99537**	*5.375*	*5.371*	*5.379*	*0.813*	*1*	*5.875*	*1.25*
138.13	138.024	138.227	38.1	42.9	146.1	48	**99548**	*5.438*	*5.434*	*5.442*	*1.5*	*1.688*	*5.75*	*1.875*
139	138.989	139.192	14.3	19.1	154.9	24	**99547**	*5.472*	*5.472*	*5.48*	*0.563*	*0.75*	*6.1*	*0.938*
139.7	139.649	139.852	20.7	25.4	150.8	32	**99549**	*5.5*	*5.498*	*5.506*	*0.813*	*1*	*5.938*	*1.25*
139.75	139.649	139.852	13.2	17.9	150.8	32	**99550**	*5.502*	*5.498*	*5.506*	*0.518*	*0.705*	*5.938*	*1.25*
140	139.903	140.106	20.5	25.5	151	32	**99552**	*5.512*	*5.508*	*5.516*	*0.807*	*1*	*5.945*	*1.25*
145	144.78	145.009	19.5	22.2	149.9	46	**99571**	*5.709*	*5.7*	*5.709*	*0.768*	*0.874*	*5.902*	*1.811*
145.54	145.44	145.644	14.3	19.1	149.9	50	**99562**	*5.734*	*5.726*	*5.734*	*0.563*	*0.75*	*5.9*	*1.938*
146.05	145.948	146.152	20.6	25.4	157	45	**99575**	*5.75*	*5.746*	*5.754*	*0.813*	*1*	*6.18*	*1.75*
149.23	149.123	149.327	25.4	31.8	157.2	34	**99587**	*5.875*	*5.871*	*5.879*	*1*	*1.25*	*6.188*	*1.313*
150	149.733	149.987	26	30	159	34	**99595**	*5.905*	*5.895*	*5.905*	*1.024*	*1.181*	*6.26*	*1.338*
150.83	150.724	150.927	25.4	28.6	161.9	48	**99596**	*5.938*	*5.934*	*5.942*	*1*	*1.125*	*6.375*	*1.875*
152.4	152.273	152.476	12.7	19.1	161.5	44	**99601**	*6*	*5.995*	*6.003*	*0.5*	*0.75*	*6.36*	*1.75*
152.4	152.273	152.476	25.4	31.8	161.9	44	**99599**	*6*	*5.995*	*6.003*	*1*	*1.25*	*6.375*	*1.75*
154	153.873	154.127	26	30	161.9	33	**99605**	*6.063*	*6.058*	*6.068*	*1.024*	*1.181*	*6.375*	*1.299*
155	154.737	154.991	26	30	167	33	**99606**	*6.097*	*6.092*	*6.102*	*1.024*	*1.181*	*6.575*	*1.299*
157.56	157.429	157.683	20.6	27	168.3	45	**99620**	*6.203*	*6.198*	*6.208*	*0.813*	*1.063*	*6.625*	*1.75*
158.75	158.623	158.877	26.2	31.8	168.3	45	**99625**	*6.25*	*6.245*	*6.255*	*1.031*	*1.25*	*6.625*	*1.75*
160	159.741	159.995	25.4	31.8	177.8	35	**99630**	*6.299*	*6.289*	*6.299*	*1*	*1.25*	*7*	*1.375*
165.1	164.973	165.227	25.4	31.8	177.8	35	**99650**	*6.5*	*6.495*	*6.505*	*1*	*1.25*	*7*	*1.375*
170	169.748	170.002	31.8	38	182.6	45	**99640**	*6.688*	*6.683*	*6.693*	*1.25*	*1.496*	*7.188*	*1.75*
171.45	171.323	171.577	20.6	27	181	45	**99675**	*6.75*	*6.745*	*6.755*	*0.813*	*1.063*	*7.125*	*1.75*
175	174.752	175.006	28	32	187	36	**99687**	*6.89*	*6.88*	*6.89*	*1.102*	*1.26*	*7.362*	*1.378*
177.8	177.673	177.927	25.4	31.8	189.9	43	**99700**	*7*	*6.995*	*7.005*	*1*	*1.25*	*7.475*	*1.688*
180	179.756	180.01	33	38	190.5	45	**99721**	*7.087*	*7.077*	*7.087*	*1.3*	*1.496*	*7.5*	*1.752*
184	183.998	184.252	31.7	38.1	197.1	56	**99725**	*7.25*	*7.244*	*7.254*	*1.25*	*1.5*	*7.76*	*2.175*
185	184.734	184.988	32	38	199	55	**99726**	*7.278*	*7.273*	*7.283*	*1.26*	*1.496*	*7.834*	*2.165*
189.2	189.078	189.332	20.6	25.4	199.6	32	**99745**	*7.453*	*7.453*	*7.454*	*0.813*	*1*	*7.86*	*1.25*
190.5	190.373	190.627	20.6	25.4	200	32	**99750**	*7.5*	*7.495*	*7.505*	*0.813*	*1*	*7.875*	*1.25*
196.85	196.723	196.977	25.4	33.3	210.1	48	**99775**	*7.75*	*7.745*	*7.755*	*1*	*1.313*	*8.27*	*1.875*
200	199.873	200.127	34.5	38.1	212.7	45	**99787**	*7.875*	*7.869*	*7.879*	*1.359*	*1.5*	*8.375*	*1.75*
201.63	201.498	201.752	25.4	31.8	212.7	45	**99799**	*7.938*	*7.933*	*7.943*	*1*	*1.25*	*8.375*	*1.75*
203.2	203.073	203.327	25.4	31.8	212.7	45	**99800**	*8*	*7.995*	*8.005*	*1*	*1.25*	*8.375*	*1.75*

訂貨標號：SSS-編號 或軸徑